ACTUATOR: 9804 SL039

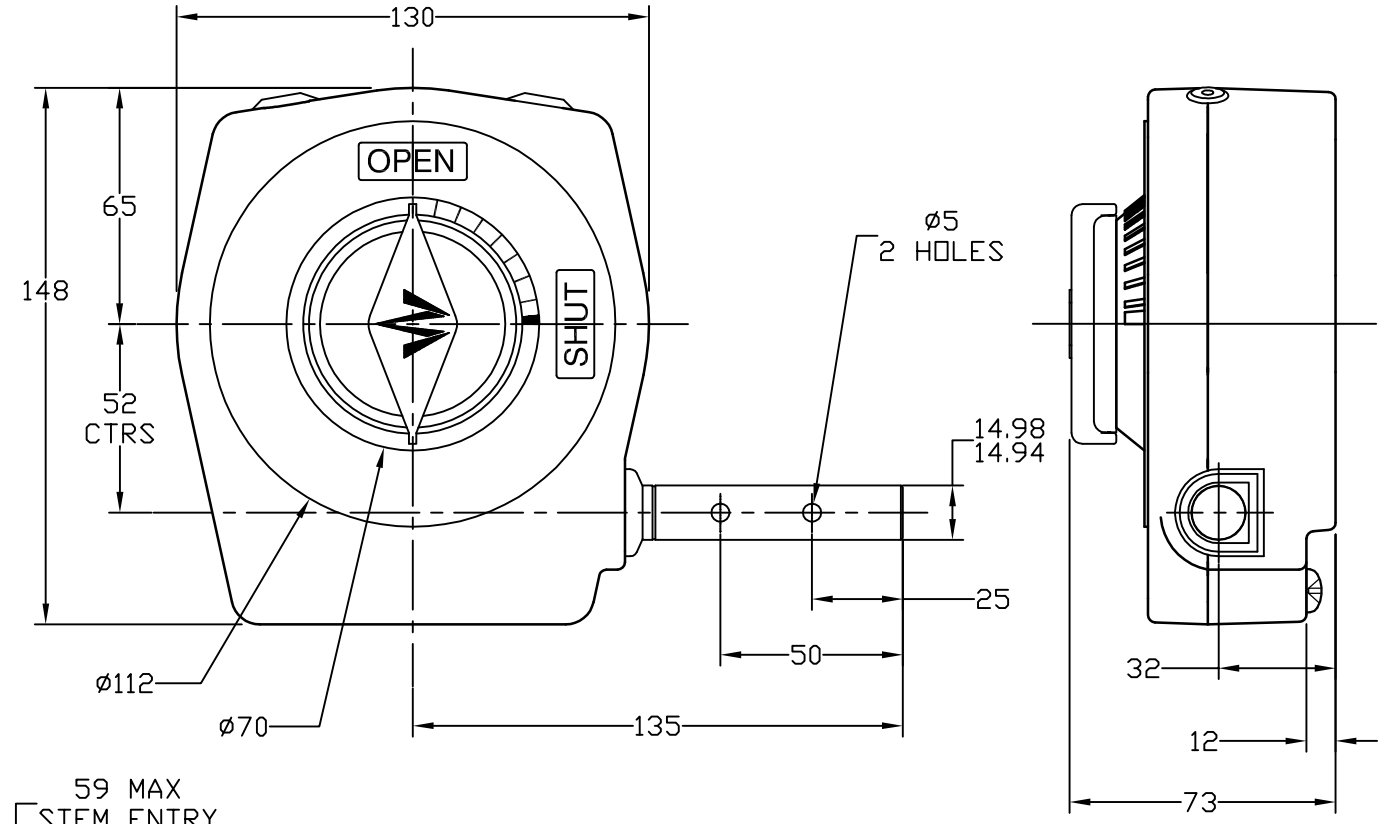

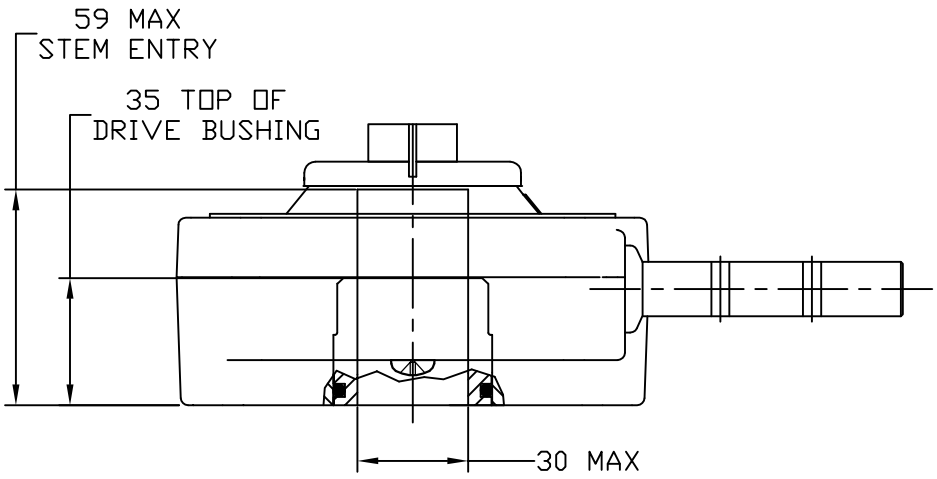

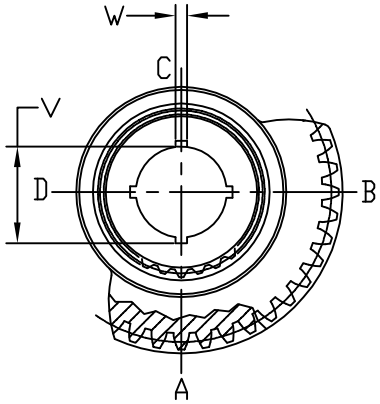

OUTPUT KEYWAY DETAILS
(SHOWN IN OPEN POSITION)

GENERAL INFORMATION

TRAVEL.....90° ±5° AT BOTH ENDS
RATIO.....40:1
TURNS TO CLOSE.....10
MECH. ADVANTAGE....11 ±10%

MAX. OUTPUT TORQUE (1000 CYCLES)...600 Nm
MAX. OUTPUT TORQUE (2000 CYCLES)..500 Nm
MAX. INPUT TORQUE (1000 CYCLES).....55 Nm
MAX. INPUT TORQUE (2000 CYCLES).....45 Nm

MOUNTING HOLE DETAIL: PREFERRED....F12 (4 x M12 ON 125 BCD)
(BSENISO 5211:2001) MAXIMUM.....F12
MINIMUM.....F07 (4 x M8 ON 70 BCD)

APPROXIMATE WEIGHT.....2.27 Kg

MASTERGEAR A REGAL BELOIT COMPANY 5466 EAST ROCKTON RD. · SOUTH BELOIT, IL 61080		DIMENSIONS IN MM	SCALE	DRAWING No.
			1:2	9804
			ST	REV. A 3/25/08

THIS PRINT IS CONFIDENTIAL AND IS THE PROPERTY OF MASTERGEAR. THIS PRINT SHALL NOT BE USED, COPIED OR REPRODUCED IN WHOLE OR IN PART NOR SHALL THE CONTENTS BE REVEALED IN ANY MANNER TO ANYONE UNLESS WRITTEN PERMISSION IS OBTAINED FROM MASTERGEAR. ©