ACTUATOR: 9801

SL039

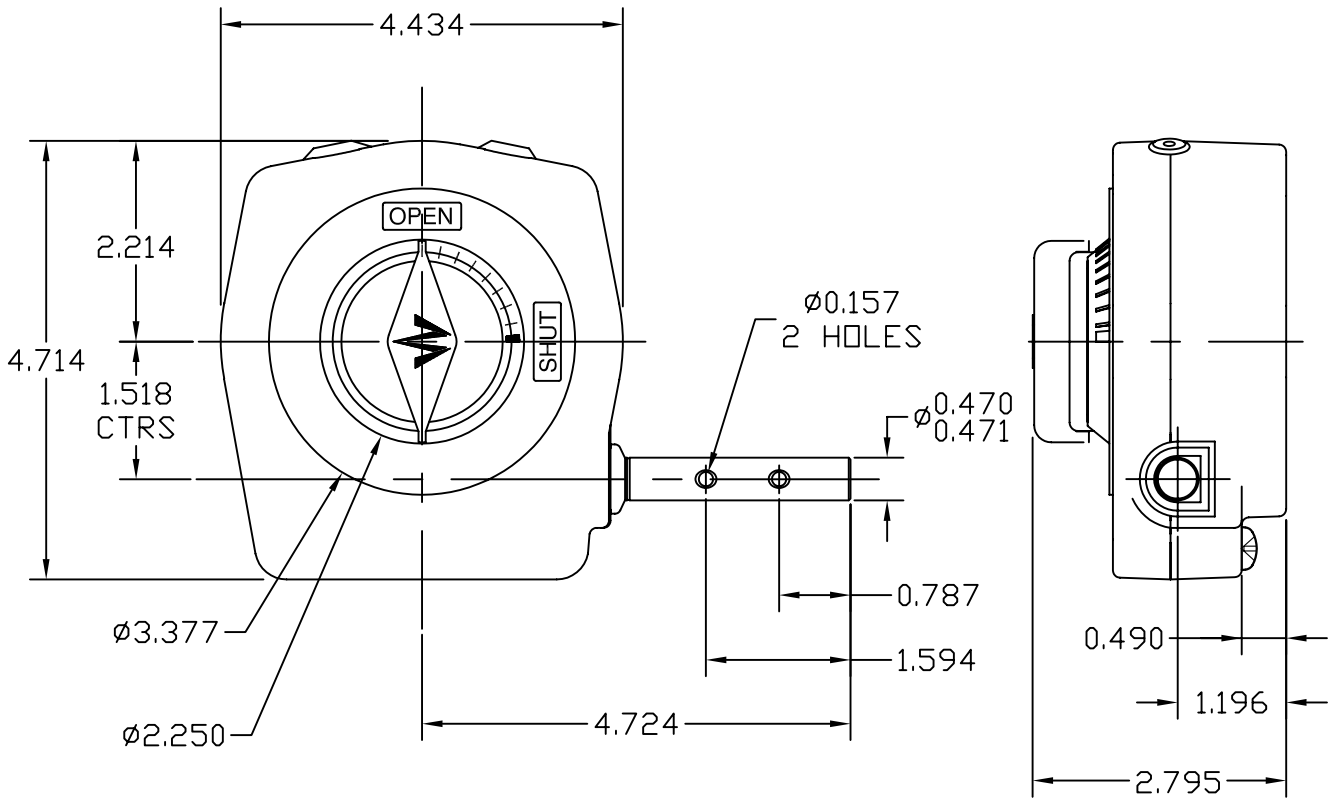

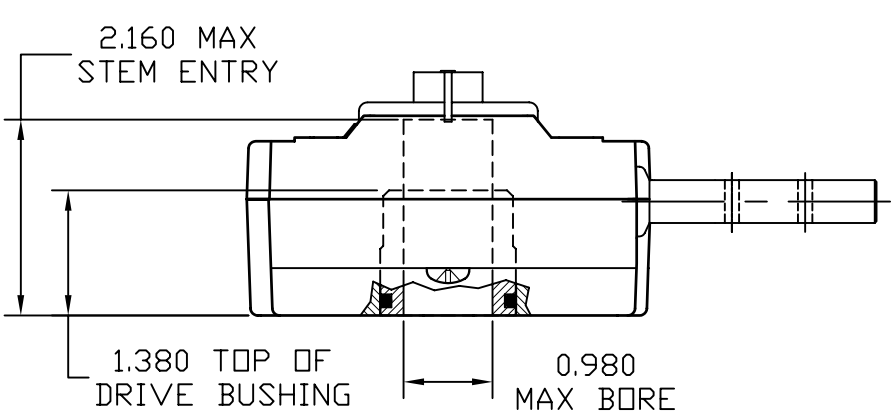

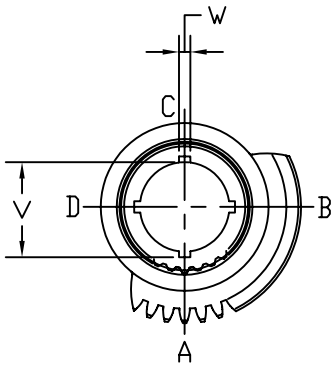

OUTPUT KEYWAY DETAILS
(SHOWN IN OPEN POSITION)

GENERAL INFORMATION

TRAVEL.....90° ±5° AT BOTH ENDS
RATIO.....40:1
TURNS TO CLOSE.....10
MECHANICAL ADVANTAGE...11 ±10%

MAX. OUTPUT TORQUE (1000 CYCLES)...2400 IN-LBS
MAX. OUTPUT TORQUE (2000 CYCLES)..2000 IN-LBS
MAX. INPUT TORQUE (1000 CYCLES).....218 IN-LBS
MAX INPUT TORQUE (2000 CYCLES).....182 IN-LBS

MOUNTING HOLE DETAIL: PREFERRED....FA10 (4 x 3/8-16 ON 4.00 BCD)
(MSS SP-101) MAXIMUM.....FA10
MINIMUM.....FA05 (4 x 1/4-20 ON 2.00 BCD)

APPROXIMATE WEIGHT.....3.5 LB

MASTERGEAR
A REGAL BELOIT COMPANY
5466 EAST ROCKTON RD. · SOUTH BELOIT, IL 61080

DIMENSIONS IN INCHES	SCALE	DRAWING No.
	1:2	9801

THIS PRINT IS CONFIDENTIAL AND IS THE PROPERTY OF MASTERGEAR. THIS PRINT SHALL NOT BE USED, COPIED OR REPRODUCED IN WHOLE OR IN PART NOR SHALL THE CONTENTS BE REVEALED IN ANY MANNER TO ANYONE UNLESS WRITTEN PERMISSION IS OBTAINED FROM MASTERGEAR. ©

NJC

REV. A
4/14/05